LACELA

Product: Cordless Shear Art. No. D271501

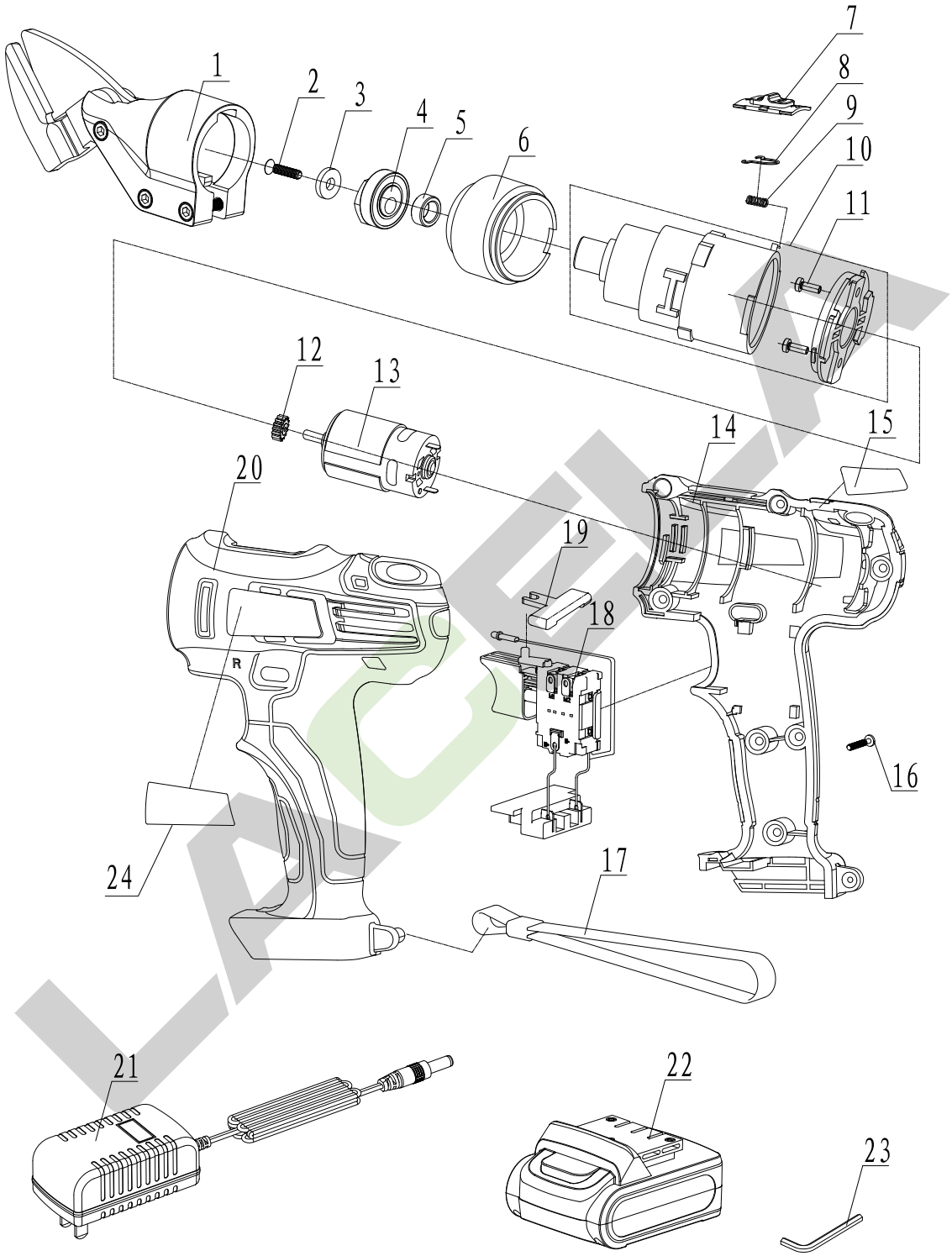

Version No.	D	Enable Time	2022.9

LACELA

Product:Cordless Shear Art.No.D271501

No.	Part Name(Chinese)	Part Name(English)	Code	Qty	No.	Part Name(Chinese)	Part Name(English)	Code	Qty
1	大刀头	Shear Head	10701015041	1					
2	反牙螺钉M5×20-LH	Screw M5×20-LH	30201073	1					
3	平垫片5×15×2	Washer 5×15×2	30403115	1					
4	偏心块组件	Crank Block Assembly	10701015044	1					
5	轴套	Bearing Sleeve	10306002143	1					
6	前盖组件	Front Cover Assembly	10701015043	1					
7	档位推钮	Gear push button	10101007194	1					
8	档位推钮卡簧	Gear push circlip	30303037	1					
9	档位弹簧	Gear push spring	10303001135	1					
10	变速箱组件	Gear Box Complete	10701015052	1					
11	带平弹垫螺钉M3×6	Screw M3×6	30201163	2					
12	电机齿轮	Motor Gear	10302004167	1					
13	电机	Motor	10608002013	1					
14	右机壳	Right Housing	10101002145	1					
15	铭牌	Name Plate	20302007591	1					
16	自攻螺钉ST3×14	Screw M3×14	30202097	8					
17	挂绳	Sling	21201010053	1					
18	开关组件	Switch Assembly	10608002011	1					
19	换向推杆	Reversing Push Rod	10101007140	1					
20	左机壳	Left Housing	10101002146	1					
21	CD1810充电器	Charger CD1810	56102007	1					
22	LD1815电池包	Bettery LD1815	56101110	1					
23	内六角扳手4	Wrench 4	21201002018	1					
24	商标	Trademark	20402007079	1					
Version No.		D			Enable Time		2022.9		

LACELA